TOSHIBA RF POWER AMPLIFIER MODULE

# S−AU100

○RF POWER AMPLIFIER MODULE for UHF BAND

・for digital use

## MAXIMUM RATINGS (Tc = 25°C, $Z_G = Z_L = 50\Omega$, $I_T$<3A)

| CHARACTERISTIC | SYMBOL | TEST CONDITION | RATING | UNIT |
|---|---|---|---|---|
| Total Current | IT | | 3 | A |
| DC Supply Voltage | VDD | VGG = 0V(GND), RF:none | 20 | V |
| DC Supply Voltage | VGG | 9.0V≦VDD≦14.0V, RF:none | 8 | V |
| Instantaneous Output Power | Pomax | VGG≦7V, 9.0V≦VDD≦14.0V | 40 | dBmW |
| Input Power | Pi | 9.0V≦VDD≦14.0V, VGG≦7V | 20 | dBmW |
| Operating Case Temperature Range | Tc (opr) | 9.0V≦VDD≦14.0V, VGG≦7V, | -30～100 | °C |
| Storage Temperature Range | Tstg | | -40～110 | °C |

## • PACKAGE OUTLINE

Unit in mm

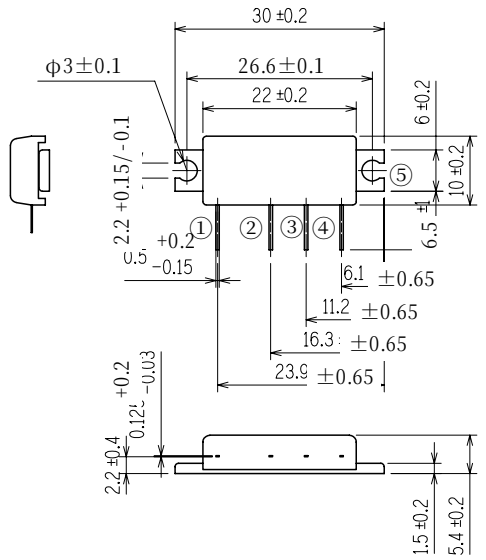


1. RF INPUT
2. VGG
3. VDD
4. RF OUTPUT
5. GROUND (FLANGE)

| | |
|---|---|
| JEDEC | - |
| JEITA | - |
| TOSHIBA | 5-23F |

Weight:3.3g

## • ELECTRICAL CHARACTERISTICS (Tc = 25°C, $Z_G$ = 50Ω, $I_T$<3A)

| CHARACTERISTIC | SYMBOL | TEST CONDITION | MIN. | TYP. | MAX. | UNIT |
|---|---|---|---|---|---|---|
| Frequency Range | $f_{range}$ | — | 905 | — | 915 | MHz |
| Input Power | Pi | $V_{DD}$ = 10.8V, $I_{DD}$ = 1.8A ($V_{GG}$=adjust) Po = 35dBmW, $Z_L$ = 50Ω | — | 5 | 8 | dBmW |
| Output Power | Po | $V_{DD}$ = 10.8V, $V_{GG}$ ($V_{GG}$=adjust to $I_{DD}$ =1.8A) Pi = 18dBmW, $Z_L$ = 50Ω | 39 | — | — | dBmW |
| Gate Bias Voltage | $V_{GG}$ | $V_{DD}$ = 10.8V, $I_{DD}$ = 1.8A ($V_{GG}$=adjust) Po = 35dBmW (Pi=adjust), $Z_L$ = 50Ω | 5 | — | 7 | V |
| Gate Bias Current | $I_{GGBias}$ | $V_{DD}$ = 10.8V, $I_{DD}$ = 1.8A ($V_{GG}$=adjust) Po = 35dBmW(Pi=adjust), $Z_L$ = 50Ω After that Pi OFF | — | — | 1 | mA |
| Adjacent-Channel Power Ratio | ACP | $V_{DD}$ = 10.8V, $I_{DD}$ = 1.8A ($V_{GG}$=adjust) Po = 35dBmW(Pi=adjust), $Z_L$ = 50Ω Modulated Wave :π/4•DQPSK,(α=0.5,32kbps),Band Width : 16kHzFrequency,Offset : 25kHz | — | -40 | -37 | dB |
| Second Harmonic | 2nd HRM | $V_{DD}$ = 10.8V, $I_{DD}$ = 1.8A ($V_{GG}$=adjust) Po = 35dBmW(Pi=adjust), $Z_L$ = 50Ω | — | -40 | -30 | dB |
| Third Harmonic | 3rd HRM | | — | -55 | -30 | dB |
| Harmonic | HRM | | — | — | -35 | dB |
| Rate of Adjustment for Input Load | VSWRin | Input VSWR ( When RF output pin connects 50Ω Load ) | — | — | 3.0 | — |
| Rate of Adjustment for Output Load | VSWRout | Input VSWR ( When RF input pin connects 50Ω Load ) | — | — | 3.5 | — |
| Ralative Phase Variation | — | $V_{DD}$ = 10.8V, $I_{DD}$ = 1.8A ($V_{GG}$=adjust) $Z_L$ = 50 Ω ,Po = 38.5 to 5dBmW (Pi=adjust) | — | — | ±10 | deg |
| Load Mismatch | — | $V_{DD}$ = 10.8V, $I_{DD}$ = 1.8A ($V_{GG}$=adjust) Po = 39dBmW (Pi=adjust @ $Z_L$ = 50Ω) VSWR LOAD 20 : 1 ALL PHASE | No Degradation | | | — |
| Stability | — | 9.0V≦$V_{DD}$≦12.5V, 1V≦$V_{GG}$≦7V -40dBmW≦Pi≦17dBmW VSWR LOAD 6 : 1 ALL PHASE | All spurious output than 60dB below desired signal | | | — |

## The cautions on handling

・Since this product is a cap insertion system, be careful of too much shock and foreign substance permeation in the case of handling. Moreover, please do not remove a cap. When the cap was removed, a foreign substance etc. enters or a shock is given to this product, it becomes a cause of emitting smoke and failure.

・This product is electrostatic sensitivity, please handle with caution.

・This product is not designed supposing continuation transmission of a base station use etc., and an intention is not carried out, either. Since you cannot guarantee reliability, either, please do not use it for a use which performs continuation transmission.

・This product is designed supposing single operation. It cannot guarantee about operation by parallel. Please inquire by judgment of your company about parallel operation.

・The mounting method

・Please give the degree of flat of a heat sink as 50um or less. When the degree of flat is 50um or more, the stress besides assumption may occur, it may become the cause of the substrate inside a module, breakage of parts, and generation of heat, and a module may result in destruction.

・Please use the compound for raising adhesion between a module and a heat sink, applying.

・Please give me the bolting torque in the case of a screw clamp by 1.2～1.5 N･m with the 4mm diameter of a screw.

・Please solder the modular Read part after a screw clamp.

## SCHEMATIC

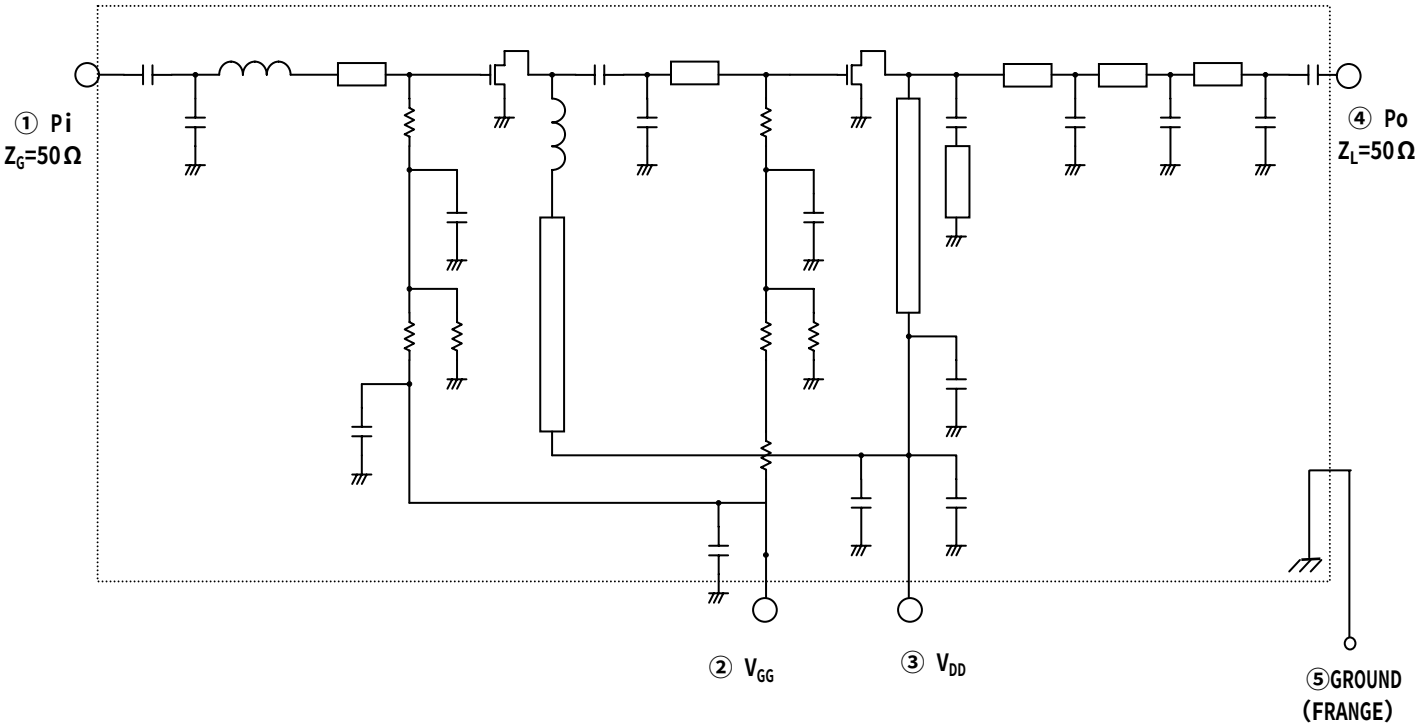


## TEST FIXTURE

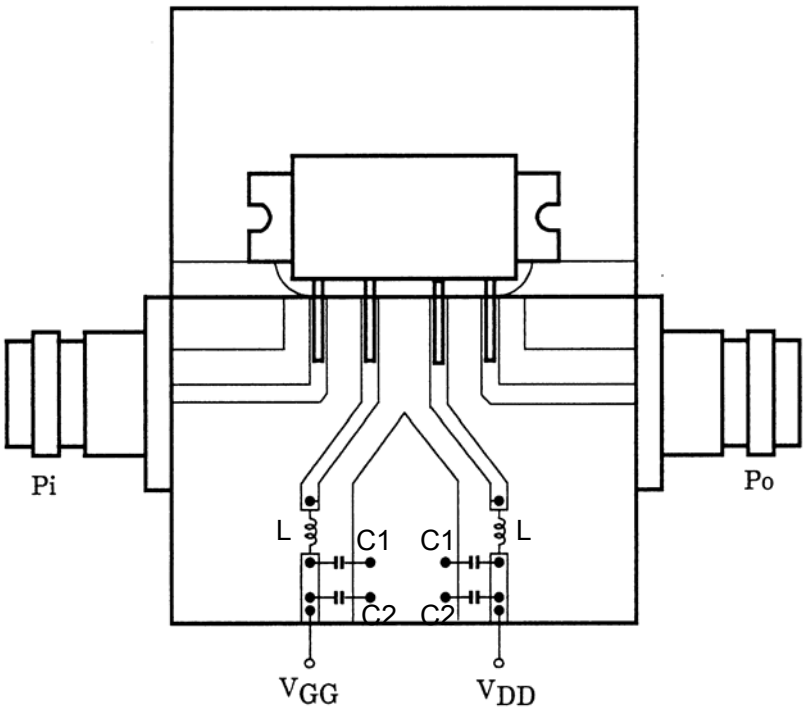


C1 : 10000pF
C2 : 10 μ F
L : φ0.8 ENAMEL WIRE 8T 5ID

## MARKING

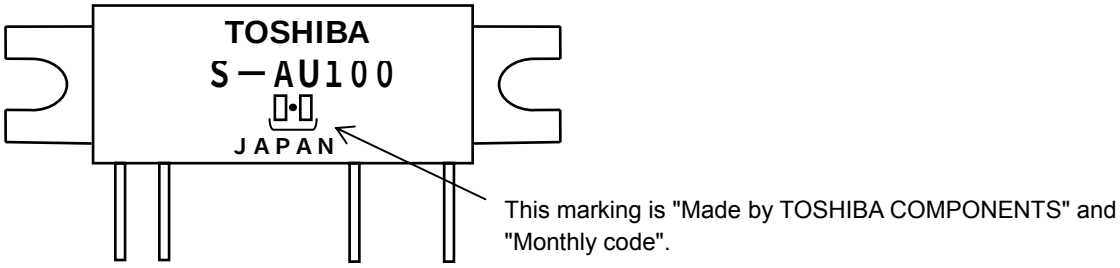


=Monthly Code=

Indicated manufacture month, one digit is used in alphabet

Indicated manufacture year, one digit is used under the A.D. year

## RESTRICTIONS ON PRODUCT USE

030619EAA

- The information contained herein is subject to change without notice.
- The information contained herein is presented only as a guide for the applications of our products. No responsibility is assumed by TOSHIBA for any infringements of patents or other rights of the third parties which may result from its use. No license is granted by implication or otherwise under any patent or patent rights of TOSHIBA or others.
- TOSHIBA is continually working to improve the quality and reliability of its products. Nevertheless, semiconductor devices in general can malfunction or fail due to their inherent electrical sensitivity and vulnerability to physical stress. It is the responsibility of the buyer, when utilizing TOSHIBA products, to comply with the standards of safety in making a safe design for the entire system, and to avoid situations in which a malfunction or failure of such TOSHIBA products could cause loss of human life, bodily injury or damage to property.
  In developing your designs, please ensure that TOSHIBA products are used within specified operating ranges as set forth in the most recent TOSHIBA products specifications. Also, please keep in mind the precautions and conditions set forth in the “Handling Guide for Semiconductor Devices,” or “TOSHIBA Semiconductor Reliability Handbook” etc..
- The TOSHIBA products listed in this document are intended for usage in general electronics applications (computer, personal equipment, office equipment, measuring equipment, industrial robotics, domestic appliances, etc.). These TOSHIBA products are neither intended nor warranted for usage in equipment that requires extraordinarily high quality and/or reliability or a malfunction or failure of which may cause loss of human life or bodily injury (“Unintended Usage”). Unintended Usage include atomic energy control instruments, airplane or spaceship instruments, transportation instruments, traffic signal instruments, combustion control instruments, medical instruments, all types of safety devices, etc.. Unintended Usage of TOSHIBA products listed in this document shall be made at the customer’s own risk.
- TOSHIBA products should not be embedded to the downstream products which are prohibited to be produced and sold, under any law and regulations.