Product Specifications

COMMSCOPE®

POWERED BY ANDREW®

L2TTM-PL

TNC Male Positive Lock for 3/8 in LDF2-50 cable

General Specifications

Interface	TNC Male
Body Style	Straight
Brand	HELIAX®
Mounting Angle	Straight

Electrical Specifications

Connector Impedance	50 ohm
Operating Frequency Band	0 – 6000 MHz
Cable Impedance	50 ohm
3rd Order IMD, typical	-107 dBm @ 910 MHz
RF Operating Voltage, maximum (vrms)	500.00 V
dc Test Voltage	1500 V
Outer Contact Resistance, maximum	0.40 mOhm
Inner Contact Resistance, maximum	1.50 mOhm
Insulation Resistance, minimum	5000 MOhm
Average Power	0.7 kW @ 900 MHz
Peak Power, maximum	5.00 kW
Insertion Loss, typical	0.05 dB
Shielding Effectiveness	-110 dB

©2013 CommScope, Inc. All rights reserved. All trademarks identified by ® or ™ are registered trademarks, respectively, of CommScope.
All specifications are subject to change without notice. See www.commscope.com for the most current information. Revised: July 26, 2013

Product Specifications

L2TTM-PL

Outline Drawing

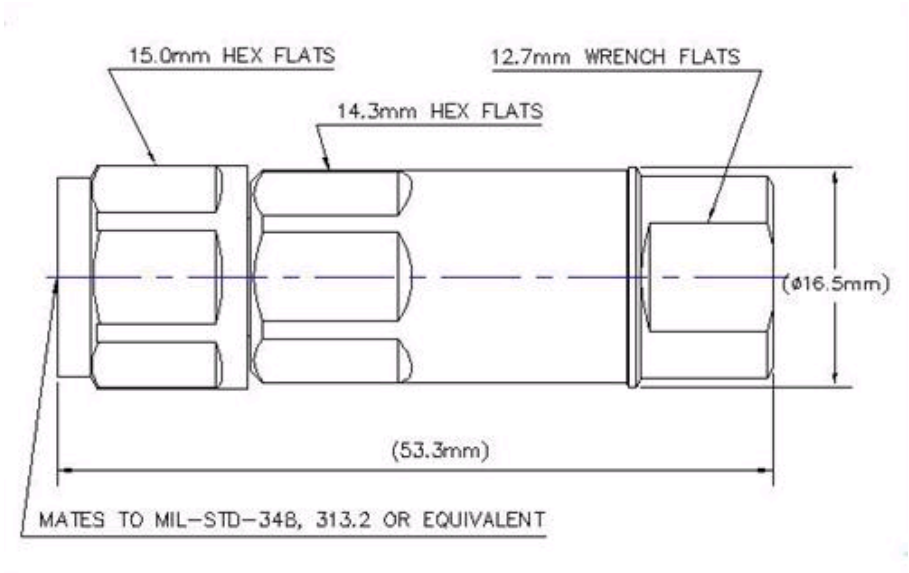

Mechanical Specifications

Outer Contact Attachment Method	Ring-flare
Inner Contact Attachment Method	Captivated
Outer Contact Plating	Trimetal
Inner Contact Plating	Gold
Attachment Durability	25 cycles
Interface Durability	500 cycles
Interface Durability Method	IEC 61169-17:9.5
Connector Retention Tensile Force	670 N | 151 lbf
Connector Retention Torque	2.70 N-m | 1.99 ft lb
Insertion Force	15.00 N | 3.37 lbf
Insertion Force Method	IEC 61169-1:15.2.4
Pressurizable	No
Coupling Nut Proof Torque	1.70 N-m | 1.25 ft lb
Coupling Nut Retention Force	445.00 N | 100.04 lbf
Coupling Nut Retention Force Method	MIL-C-39012C-3.25, 4.6.22

Dimensions

Nominal Size	3/8 in
Diameter	16.50 mm | 0.65 in
Height	16.50 mm | 0.65 in
Length	53.84 mm | 2.12 in
Weight	48.84 g | 0.11 lb
Width	16.50 mm | 0.65 in

©2013 CommScope, Inc. All rights reserved. All trademarks identified by ® or ™ are registered trademarks, respectively, of CommScope.
All specifications are subject to change without notice. See www.commscope.com for the most current information. Revised: July 26, 2013

Product Specifications

L2TTM-PL

Environmental Specifications

Operating Temperature	-55 °C to +85 °C (-67 °F to +185 °F)
Storage Temperature	-65 °C to +125 °C (-85 °F to +257 °F)
Immersion Depth	1 m
Immersion Test Mating	Mated
Immersion Test Method	IEC 60529:2001, IP68
Moisture Resistance Test Method	IEC 60068-2-3
Mechanical Shock Test Method	IEC 60068-2-27
Thermal Shock Test Method	IEC 60068-2-14
Vibration Test Method	IEC 60068-2-6
Corrosion Test Method	IEC 60068-2-11

Standard Conditions

Attenuation, Ambient Temperature	20 °C | 68 °F
Average Power, Ambient Temperature	40 °C | 104 °F
Average Power, Inner Conductor Temperature	100 °C | 212 °F

Return Loss/VSWR

Frequency Band	VSWR	Return Loss (dB)
0–960 MHz	1.02	40.00
960–2200 MHz	1.06	30.30
2200–2700 MHz	1.11	26.00
2700–4000 MHz	1.13	24.00
4000–6000 MHz	1.22	20.00
6000–8000 MHz	1.25	19.00
8000–10000 MHz	1.38	16.00

Regulatory Compliance/Certifications

Agency	Classification
RoHS 2011/65/EU	Compliant by Exemption
China RoHS SJ/T 11364-2006	Above Maximum Concentration Value (MCV)
ISO 9001:2008	Designed, manufactured and/or distributed under this quality management system

* Footnotes

Immersion Depth	Immersion at specified depth for 24 hours
Insertion Loss, typical	$0.05\sqrt{\text{freq (GHz)}}$ (not applicable for elliptical waveguide)

©2013 CommScope, Inc. All rights reserved. All trademarks identified by ® or ™ are registered trademarks, respectively, of CommScope.
All specifications are subject to change without notice. See www.commscope.com for the most current information. Revised: July 26, 2013